THE PUNATA-TIRAQUE IRRIGATION PROJECT NEAR COCHABAMBA, BOLIVIA

Report of a consultancy assignment, January 1988

R.J. Sevenhuijsen, R.J. Oosterbaan and K. Zijderveld

International Institute for Land Reclamation and Improvement (ILRI)
Wageningen, The Netherlands

On website www.waterlog.info , public domain.

Table of contents

1. Introduction 3
2. Project history 4
2.1 Organizations involved 4
2.1 The project's progress 4
2.2 New irrigation concepts 6
3. Present farming systems 7
3.1 The area 7
3.2 The farmers 7
3.3 Cropping systems 8
3.4 Supporting services to farming 9
3.5 Off-farm employment 10
3.6 Yearly incomes 10
4. Available water resources 11
4.1 Reservoirs 11
4.2 Runoff 11
4.3 Groundwater 12
4.3.1 Water balance 12
4.3.2 Aquifer characteristics 13
4.3.3 Tube-wells 14
4.4 Rainfall 17
4.5 Summary of water resources 18
5. Present and future water requirements 18
(To be completed)
5.1 Punata 18
5.2 Tiraque 18
6. Water requirements and availability 18
(To be completed)
6.1 Actual and projected cropping pattern in Punata 18
6.2 Water availability in Tiraque 18
7. Soils, salinity and water tables 19
7.1 Soil survey reports and additional observations 19
7.2 Assessment of the future salinity and drainage problems 20
8. Irrigation and drainage network in Punata 22
(To be completed)
8.1 Existing irrigation system 22
8.2 New irrigation network 22
8.3 Observations on the new irrigation network design 22
8.4 Drainage systems 22
8.4.1 River branches 22
8.4.2 Collector drainage system 22
9. Operation and maintenance 22
(To be completed)
9.1 Background 22
9.2 The present O & M program 22
9.3 Proposal for a reorganized O & M unit 22
10 Financial and economic evaluation 22
(To be completed)

1. Introduction

The region of Punata, at the upper en of the Valle Alto at about 2800 m altitude, has a summer rainfall of 400 to 450 mm starting in the second half of November end ending in March. Maize is here the most important food crop, followed by potatoes. Alfalfa is the dominant fodder crop, followed by maize straw. These crops could, of old, only be planted successfully because of the existence of additional water resources like runoff, floods, river base-flow and groundwater. In the winter months, crop growth is restricted due to the occurrence of night frosts, especially in June and July, and absence of rains.

The region of Tiraque more than 20 km upstream from Punata, at about 3200 m altitude, has a summer rainfall of about 500 mm. The rainfall is sufficient to grow food crops like potatoes and legumes, and fodder crops like barley and oats. However, without irrigation, the yields are low. In the winter months there is even less crop growth than in Punata.

In both regions, the river floods during the rainy summer period can be used for irrigation by anyone who wants to. However, when the river flow recedes, the stream can only be used for rotational irrigation by those who are entitled to take part in it (the *mita* system). By the month of May the river base-flow becomes strongly reduced, and a drought period sets in, lasting into November.

In Punata and Tiraque, irrigation is considered desirable to start the cropping season in August/September, so that an early harvest can be obtained. The early harvest has a high market value and reduces peak labor requirements. Further, the irrigation reduces the risk of crop failure and it permits diversification of agricultural produce. This diversification is already noticeable in Tiraque, which avails of abundant irrigation water since 1983, after the enlargement of the Koari and Kehuiña Kocha reservoirs. Irrigation water from storage reservoir is therefore very much welcomed by the farming communities during the drought period.

Nevertheless, there are some farming communities that have refrained in the past from the extra effort to obtain additional irrigation water and who seemed to be content with purely rain-fed cropping.

At a modest scale, irrigation from deep-wells is also practiced.

In order to satisfy the needs of the majority of the farmers who strongly wish to have additional irrigation water, the irrigation project Punata-Tiraque began to be developed in the seventies.

2. Project history

2.1 Organizations involved

In May 1977, the government of Bolivia and W. Germany signed an agreement on the financing and implementation of the Punata-Tiraque irrigation project as a part of the "Proyecto de Riego Altiplano/Valles" (PRAV). The project was to be studied and executed by the Bolivian "Servicio Nacional de Desarollo de Comunidades" (SNDC) with consultancy of the German "Salzgitter Consult GmbH" (SCG). The project was to be financed by the German "Kreditanstalt für Wiederaufbau" (KfW), in the form of a soft loan to Bolivia.

Till 1980, the SCG services were paid for by the German "Gesellschaft für Technische Zusammenarbeit" (GTZ). These services consisted of technical assistance to the SNDC in the preparation of feasibility studies and training. Later, from 1982 and onwards, the SGC made various contracts with SNDC for engineering services, which related to the preparation of detailed designs and tender documents as well as the supervision of the implementation of the works. These services had to be paid from the (upgraded) KfW loan, supplemented by a grant of the KfW and the European Economic Community.

In 1980, the GTZ ended its support to the project in view of the political developments in Bolivia. Two years later, when the political developments took a new turn, the GTZ was hesitant to renew the financial support to the SNDC/SCG group. In that time, the need arose for an operation and maintenance program (O&M). The funding of O&M, a program to be carried out by SNDC/SCG, was much discussed, but for a long time not defined. Finally, in 1986, the KfW made a grant available to contribute to the O&M program, initially for a pilot area (Sacabambilla). In the mean time (1984) GTZ started, in cooperation with the "Instituto Boloviano de Tecnología Agropecuaria" (IBTA), a rural extension project with a technical and organizational component of irrigation at farm level: "Manejo de Aguas y Organización de Regantes" (MAYOR). Later, its was agreed that IBTA/GTZ would also contribute to the O&M program of SNDC/SCG, which referred rather to the conveyance and distribution system of irrigation canals, than to the irrigation at farm level.

2.1 The project's progress

The report on the first feasibility study appeared in 1978. It concerned the "Laguna Robada" and aimed at enlarging the capacity of this reservoir that had formerly been constructed by various farmers of the Punata region, about 80 km downstream of the reservoir (Figure 1). These farmers belong to different communities, which are small socio-political unions of farmers founded upon the repartition of *haciendas*, large private properties, with the agrarian reform of 1953.

To protect their irrigation interest, the farmers with users' rights to the water of the reservoir (rights obtained by taking part in the construction of the dam and connecting canals) formed their "Comité de Riego Laguna Robada". Not all the members of the communities receiving water from Laguna Robada are associates of the Comité. Also, not all communities around Punata receive water from this reservoir.

The enlargement of the Laguna Robada was completed by 1985, 3 years later than foreseen.

The second feasibility study appeared in 1979. It concerned the "Koari & Kehuiña Kocha" reservoirs and aimed at enlarging the capacity of these reservoirs to provide extra irrigation to the region of Tiraque. Compared to the Laguna Robada project, this project is more complicated, because the Tiraque region is also irrigated from the Pachaj Kocha reservoir, which had in former days been constructed by a majority of the farmers (about 2/3) of the Tiraque area. Their legal/socio-political situation is similar to the one described for Laguna Robada.

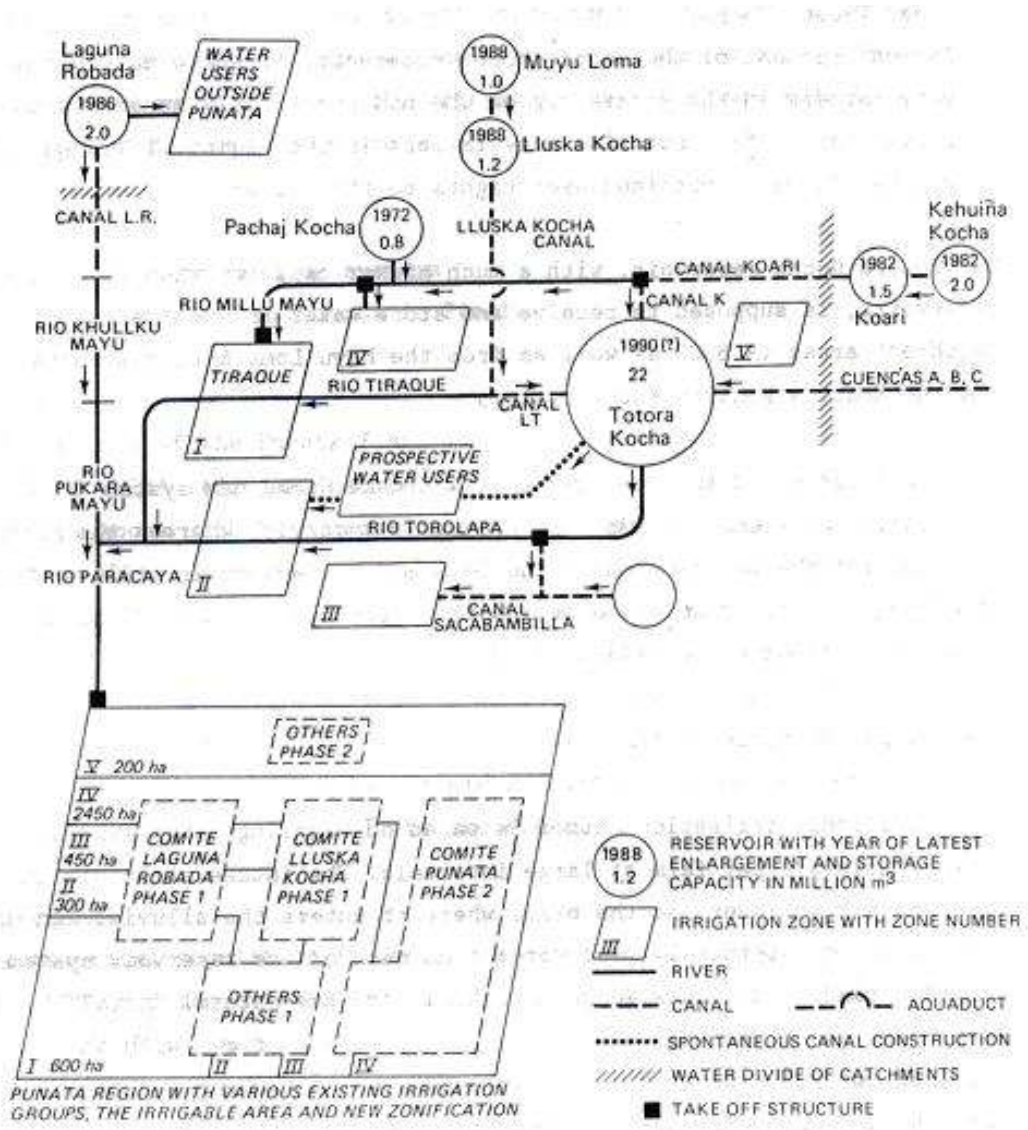

Figure 1. Schematic overview of the Punata-Tiraque irrigation project

The Koari & Kehuiña Kocha reservoirs were built by 1982. Since the labor force consisted of farmers from Tiraque as well as of farmers from communities who had no previous rights to the water of the Koari & Kehuiña Kocha reservoirs, additional water-user rights were created.

The Laguna Robada and Koari & Kehuiña Kocha were meant to serve the interests of the communities that had already made use of these same sources of water before their amplification. It was thought that the farmers, given their previous experience in irrigation, would have no difficulty to make efficient use of the water (Report KfW 28-08-1976). In the following years not much attention was paid to social aspects as water-users' organizations and farmers' involvement, or legal issues, like water rights. As a result, the extra irrigation water available in Tiraque from the enlarged dams is not distributed as expected and the new distribution network (completed only in 1987) was not operated as meant. The minority of the farmers in Tiraque (about 1/3) who had no previous rights to the irrigation water have still no rights, although the new water supply was calculated on the basis of area cultivated and crop water requirements, which included them. For this and other reasons, the amount of water available from the new dam sites has not been fully utilized. Thus, the absence of an operation and maintenance program – which would also have to cover organizational and legal aspects – till recently made itself strongly felt in the Tiraque region.

After the first two feasibility studies, the report on the more encompassing Punata project appeared in 1980. This study contains two new elements:
1. – The enlargement of the Muyu Loma & Lluska Kocha Dams, which in former times had been constructed by farmers of the Punata region who did not belong to the Laguna Robada system, and who formed the Comité de Riego Lluska Cocha;
2. – The enlargement of the Totora Kocha reservoir, to serve mainly the many farmers in the Punata region who had practically no access to irrigation so far, and also some farmers in the region of Tiraque who had formerly obtained user rights to this water.

The Totora Kocha reservoir, with a much higher capacity than the other reservoirs, is supposed to receive and store water from different catchment areaa (denominated c*uenca* A, B, and C) as well as from the Muyu Loma & Lluska Kocha and the Koari & Kehuiña Kocha systems.

The construction of the new Muyu Loma & Lluska Kocha dam system (originally foreseen for 1984) is presently underway, whereas the decision for the construction of the Totora Kocha system is still pending. It is now considered as a part of the Punata Phase II project (originally foreseen for 1987).

2.2 New irrigation concepts

The traditional irrigation method is based on handling large irrigation flows (*golpes*) per farm at large intervals. The intake structures in the Pucara Mayu river, at the place where it enters the alluvial fan of Punata, would alternately pass water from each of the reservoir systems (Laguna Robada and Lluska Kocha /Muyu Loma) and the natural *mita* water. The new system has been designed for smaller flows with shorter

rotation intervals, but it works continuously for the whole area, so that there is no need anymore to separate the various sources of water. It covers a much larger area than the traditional system and it incorporates the associations if the *mita* systems (which may have partly the same members), the associations of tube-well systems (which may also have partly the same members) as well as the persons who had no previous water rights.

Hence, the new irrigation system makes it necessary to replace the traditional water rights by a totally new set of rights (and duties). In addition, the farmers will have to get used to new water distribution methods and new field irrigation techniques. Because the new irrigation zones do not correspond to the boundaries of the existing, scattered, Comité's de Riego (Figure 1), not only the water management but also the organizational structure will have to be adjusted to the new situation.

3. Present farming systems

3.1 The area

The gross area of the Punata I and II projects is estimated at 4600 ha, 90% of which can be used for agriculture or animal husbandry. About 1150 ha, mainly in Punata I, presently receive irrigation water, either surface water derived from the Laguna Robada or Lluska Kocha dam, or water pumped from the 16 deep wells in the project area (estimated at 350 ha). In addition there are a few hundred hectares that receive occasional water from *mita* irrigation (wild flooding).

Soils are of colluvial/alluvial origin and are considered as fertile.
The area is sloping gently (1%) to the south.

3.2 The farmers

The total rural population in Punata is estimated at 25 000. There are about 4000 families of which an estimated 3680 are farmer families. The farms are small. The average size is 1.3 ha of which 1 ha is cropped. The modal size of farm, according to Quiton (*Estudio socio-economico del area de influencia del proyecto de riego Punata*, 1987) is smaller, about 0.7 ha.

Most farmers are (sons of) former farmer laborers. They have obtained the rights to their land after the 1953 Agrarian Reform. Land is registered and highly valued. Land property distribution is still rather egalitarian, but part (30% in Punata I and 20% in Punata II) of the population is engaged in sharecropping, as they have little or no land. The percentage of landless is estimated to be about 10% in Punata I and 3% in Punata II.

The natural increase of the population is high: birth rate for the Department of Cochabamba is 4.2%, death rate 1.7%, natural growth 2.5%. Life expectancy is 46 years for males, 51 for females. Permanent outmigration from Punata is low, but there is a considerable temporary migration, mainly to Cochabamba and neighboring departments, and partly to Argentina.

Farmers are for a large part illiterate, they speak Quechua and some Spanish. They have adapted remarkably to the rapidly changing conditions in the last 30 years. They are very concerned with irrigation. About a quarter of the farmers have earned registered rights by investing labor-time in the construction of Laguna Robada and Lluska Cocha dam. Others (or the same) are members of deep well associations. Still, an estimated 60% of the farmers depend only on *mita* water only, or occasionally buy water from deep well or gravity water associations.

Farmers' wives take an active part in the farming and although not demonstratively participating in meetings about water distribution and farming policy, they seem to have a strong informal voice in the final decisions taken.

It is important to remember that the Agrarian Reform movement had its roots in the Punata area, and that the area is considered as an indicator of political change by the government and others. Leaders have strong political links and do not hesitate to travel to La Paz to express complaints e.g. about the progress of the irrigation works.

3.3 Cropping systems

Traditionally, the main crops in irrigated farming are maize for grain, potatoes and alfalfa. Maize is partly used for brewing *chicha* (maize beer), potatoes are mainly for home consumption and most farms produce alfalfa to feed a few cows for milk and cheese production. On irrigated farms, the production of vegetables and legumes (mainly onions, carrots and beans) as a cash crop has increased considerably in the last ten years. The introduction of peaches and flowers (especially carnations) has been successful on a part of the irrigated farms. A typical cropping pattern for an irrigated farm is shown in Figure 2.

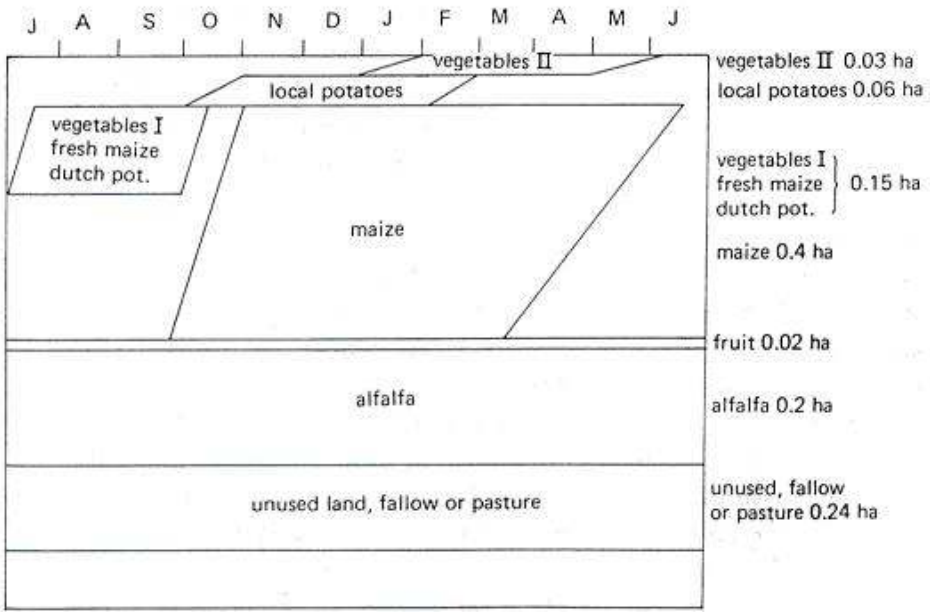

Figure 2. Typical cropping pattern of an irrigated farm

Farms without irrigation or with occasional *mita* irrigation are mainly to be found in Punata II. The difference with the more regularly irrigated farms is the reduced quantity of cash crops like vegetables and fruits and, of course, lower yields. As the alfalfa crop can survive without irrigation, relatively larger areas of the (model) farm are planted to this fodder crop. Animal husbandry on these farms is more important than on the irrigated farms. Fattening of cattle is usual. The cropping pattern is shown in Figure 3.

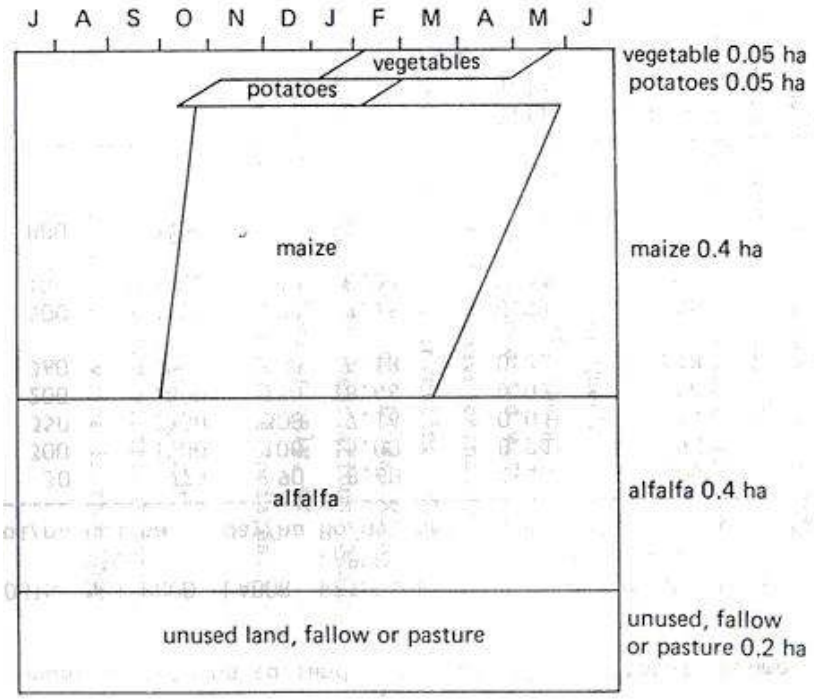

Figure 3. Typical cropping pattern of a non-irrigated farm, depending entirely on rainfall.

3.4 Supporting services to farming

Agricultural research relevant for Punata farmers is implemented by IBTA/GTZ at the San Benito research stations and on demonstration parcels on individual farms.

Farmers receive extension services from IBTA/GTZ. The MAYOR (Manejo de Agua y Organizacion de Regantes) project operates throughout the area mainly for deep-well farmers.

Farmers can buy inputs in Punata. Most requisites for framing seem to be available in the local shops. Those who are a member of the *Cooperativa Integral* can buy on credit against land as a collateral. Credit is also available from the *Banco Agricola de Bolovia* and the *Camara Agropecuario del Valle*. Total credit granted to farmers did not exceed Bol 220 000 in 1986, i.e. Bol 57 per farmer. As needs for non-labor inputs are estimated to be Bol 250 per farm, the supply of institutional credit is considered to be low.

3.5 Off-farm employment

Punata lies close to the road from Cochabamba to Santa Cruz, and some 50 km from Cochabamba. As public transport is easily available, farmers and farmers' sons find part of their income outside the project area, especially in the off-season (March to July). Non-farm income is derived from work in other farms, within or outside the province, or from activities like beer brewing, construction work, mechanics, petty trade (vegetables, cheese), small textile industries (rugs, clothing), etc.

About a quarter of the farms investigated by Quinton (op. cit.) is reported not to have off-farm income.

Income per labor-day varies widely, from Bol 7 per day (or Bol 5 + food) for farm work in Punata to Bol 30 to 40 per day for those (a minority) working in the (illegal) coca-plantations in the province Chapare (Santa Cruz). This compares to an average income for labor spent on the own farm of about Bol 10 per day, depending on the kind of crop.

3.6 Yearly incomes

Average income from farming, both crops and livestock, is estimated to be Bol 1400 per year for both Punata I and II. The Punata II farmers earn more on livestock and less on cash crops.

The income from off-farm labor is about 30% higher than that from agriculture. As 60% of the farm produce is estimated to be consumed on the farm itself, and cash income from off-farm work is around Bol 1750 per year, the total average cash income for irrigated farms will be about Bol 2300. For Bolivian standards, the Punata farmers are relatively well off. But, as the population pressure on the land increases (at the present growth rate the population has doubled before the year 2000), it is important to secure income on the land to prevent an exodus of people to the towns, where employment on any scale is presently unavailable.

Estimated average (1987) farm income from farming and off-farm employment, Punata, in Bolvianos (Bol)

Activity	Punata I	Punata II
Crops	800	500
Livestock	600	900
Off-farm work	1700	1800
Total	3100	3200

4. Available water resources

4.1 Reservoirs

The present irrigation systems of both Tiraque and Punata are fed by the Rio Paracay catchment area. In the higher parts of this watershed the following storage reservoirs were created by farmers and project:

- Muyu Loma	effective storage	.93 hm^3	for Punata
- Lluska Kocha	"	1.20 hm^3	for Punata
- Pachaj Kocha	"	.80 hm^3	for Tiraque
- Totora Kocha	"	.90 hm^3	for Tiraque

In addition to the reservoirs in the Paracay catchment, a group of farmers of Punata have built the storage basin Laguna Robada to the west of the Paracaya river basin. The effective storage volume of this reservoir was amplified in 1985 by the project to 2.0 hm^3.

A similar development holds for the reservoirs Koari Kocha and Kahuiña Kocha built by the Tiraque farmers, and amplified by the project, located NE of the Paracaya basin with an effective storage of respectively 1.50 hm^3 and 2.05 hm^3.

At present designs are prepared by the project to increase the effective storage capacity of the Existing Totora Kocha reservoir up to 21,75 hm^3. This will be a comparatively enormous enormous reservoir. For filling of this amplified reservoir the water from the upper parts of the Rio Kayrani Mayo to the east of the Paracaya river basin (the *cuencas* A, B, and C) will be diverted to Totora Kocha.

4.2 Runoff

The runoff from the Paracaya watershed, below the reservoirs, is partly used in Tiraque and Punata as supplemental irrigation during the rainy season (November to April) According to the study *Recursos Hídricos* (SCG 1987), the distribution of the runoff over the year in hm^3 is as follows:

J	F	M	A	M	J	J	A	S	O	N	D	Total
32.5	33.5	16.8	5.0	0.4	0.2	0.1	0.1	0.1	0.1	0.2	10.5	101.3

Of this total, approximately 25% is available at the intake at Tiraque and 75% remains for downstream use in Punata. However, river flows are irregular and unusable flash floods can amount to 100 m^3/s during several hours, so that only a third of the annual flow can be utilized for irrigation.

The runoff in the Paracaya River during the wet season will hardly be affected by the construction of the Totora Kocha, since water will be diverted to it from a neighboring river basin.

4.3 Groundwater

4.3.1 Water balance

The most recent assessment of the groundwater balance stems from W. Ricaldi and R. Cleveringa (Balance hidrológico estimativo del area de Punata y costos de de peroración de pozos, 1986). It is an adjustment, including the effects of future irrigation from Totora Kocha, of the balance reported by Geobol-PNUD (*Investigaciones de aguas subterráneas en las cuencas de Cochabamba*, Proyecto Integrado de Recursos Hídricos Cocahabamba, 1978).

Based on the data presented, the actual (1987) water balance for the area above the 100 iso-transmisivity line (Figure 4), which is somewhat larger than the actual project area, can be roughly estimated as follows:

Recharge	10^6 m^3/year
Deep percolation from rainfall (10% of 400 mm/year over 50 km^2)	2.0
Deep percolation of irrigation water: reservoirs + *mita* + wells (25% of 30 x 10^6 m^3/year)	7.5
Deep percolation from river branches (during the rainy season)	1.0
Groundwater inflow from surroundings	0.1
Total	10.6

Discharge	10^6 m^3/year
Natural springs	0.1
Groundwater gallery (made for Water supply to Punata Village)	0.4
Existing open wells	0.2
12 old private tube-wells (of which 10 free flowing)	0.4
13 deep tube-wells PNUD/FAO & private (25% of capacity 15 l/s each) (*)	1.5
11 deep tubewells PFL (25% of capacity 20 l/s each) (*)	1.7
Evapotranspiration from seepage zone fed by groundwater, SW of Punata (15 mm/day over 5 km^2)	2.7
Drainage of groundwater (by river branches and collector drains during the dry season)	0.5
Deep groundwater outflow through the aquifer	3.1
Total	10.6

(*) Inside the project area there are only 16 wells, but the other wells are close to its boundaries; the information on intensity of the well operation is rather conflicting

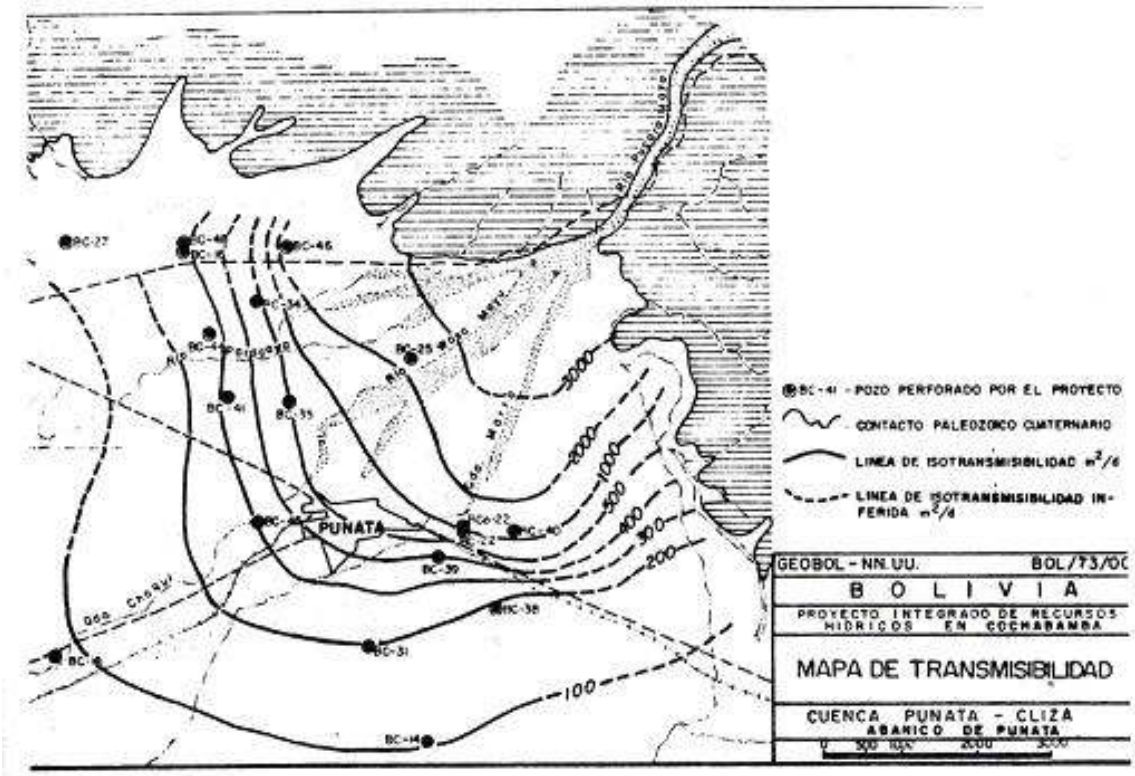

Figure 4. Iso-transmissivity lines according to Geobol-PNUD (1978)

In the future situation, with irrigation from Totora Kocha and Lluska Kocha/Muyu Loma, there will be an additional supply of irrigation water of about 25 x 10^6 m^3/year, but the irrigation with flood water from the river (including the *lameo*) will reduce. If the net additional supply is estimated at 20 x 10^6 m^3/year of which 20% is lost by deep percolation, there will be an addition to the groundwater of 4 x 10^6 m^3/year. This will give rise to an elevation of the water table, which in turn will cause an increase of the 9 discharge components mentioned. With the available information it is not possible to indicate how much the 9 components will increase individually, not how much the water table will rise. In any way, there will be scope to increase the well discharges and/or to install additional wells.

4.3.2 Aquifer characteristics

Acording to the information of Geobol-PNUD (1978), the valley (*Valle Alto*), of which Punata forms part, is underlain by an impermeable base at a depth of up to 1000 m, formed by a bedrock formation dating from the Silurium. The former lake on this rock formation has been gradually filled up by lacustrine, both colluvial and alluvial, sediments consisting of silty clays, sands and gravels, and also organic matter. In the colluvial fan of Punata, the sands and gravels are predominant. From pumping tests it was found that the transmissivity of the underground (i.e. the product of hydraulic conductivity and thickness) reaches values of up to 3000 m^2/day near the apex of the fan, but it diminishes to 100 – 200 m^2/day at the foot of the fan (Figure 4). The well tests, however, were generally carried out to depths of 200 m, so that the

transmissivities of the deeper parts of the aquifer are unknown. The actual values will be larger anyway.

For the evaluation of the water balance it is of interest to use the relative integral transmissivity (which is the product of the transmissivity with the relative length of the corresponding iso-transmissivity line. Setting in Figure 4 the length of the 3000 iso-transmisivity line at 1 (unity), the following table can be obtained:

Transmisivity	Relative length of the Iso-transmissivity line	Relative integral transmissivity
3000	1	3000
2000	2	4000
1000	3	3000
500	5	2500
400	6	2400
300	7	2100
200	9	1800
100	13	1300

From this table it is seen that the relative integral transmissivity at the foot of the fan is between ½ to 1/3 of the value at the apex.

This implies that the possibilities of underground outflow through the aquifer are still considerable and much more than suggested by the simple transmissivity values. Like the latter, the values of the first are unknown for the deeper parts of the aquifer, and the actual values will be larger.

Despite the seemingly considerable possibilities of underground outflow through the aquifer, there is a sizable area to the south and southwest of Punata, where the groundwater comes close to the soil surface and evaporates. This suggests that the single and integral transmissivity values of the underground are not so uniformly distributed as suggested by Figure 4.

In order to obtain a more complete picture of the groundwater flow, it will be required to collect data on levels and gradients of the water table and the land surface.

4.3.3 Tube-wells

Of old, the people in the Punata region have dug open wells to extract household and drinking water, but also to irrigate small gardens. In more recent times, privet tube-wells have been installed. Some of these wells, to the south of Punata village, are free flowing thanks to artesian pressure. In the late seventies, Geobol perforated a large number of deep wells in the Valle Alto with technical assistance of the United Mations Development Progam (UNDP). Most of the wells were for exploration, but some wells (25) were equipped with pumps imported from Pakistan to be used for irrigation. Of these wells, 13 are to be found in the region of Punata, of which 6 have been equipped with a pipeline system for distribution of the water. In the early eighties, the *Program de Fomento Lechero* (PFL) added 15 deep tube-wells for irrigation, of which 11 are to be found in the Punata region. In the mean time, FAO

developed a program to provide technical assistance to the farmers and to demonstrate how the wells can be used for irrigation.

The farmers who were interested to obtain water user rights of the tube-wells contributed to the well and canal construction with their labor and the paid their share for the acquisition of the pumps. Thus they obtained a well-membership. Not all the farmers in the command area of the well are members. For the upkeep of the wells and pumps, and also for the running costs, the farmers pay about 2 Bol per hour of water pumped. The water is supplied on demand, except in periods of peak irrigation requirements, especially in the month of October, when the members determine the water use in their regular meetings. Originally, the tube-wells – with pumping capacities varying from 12 to 25 l/s – were considered to irrigate 25 to 50 ha on the basis of a water requirement of 0.5 l/s per ha day and night. However, the farmers are used to irrigate with large flow sizes. Also, the peak irrigation need in October is higher than 0.5 l/s per ha, because the fields have dried out the previous months and the farmers need a pre-irrigation (*lameo*) to saturate the soils and be able to prepare and sow the land properly. Therefore, the high capacity wells (over 20 l/s) do not irrigate more than 20 ha in the period of September to November, whereas the wells with a low capacity (less than 15 l/s) do not irrigate more than 10 ha. During the following rainy season, the wells are not used intensively. On an annual basis, the wells are therefore not used for more than 20 to 30% of their capacity.

Figure 5 shows the distribution of the tube-wells over the Punata region. It can be seen that the wells are to be found mainly along the roads in the upper part of the colluvial fan (especially in zone IVa), where the transmissivity of the aquifer is relatively high. At the same time, the upper part of the colluvial fan has more surface water available – from floods, *mita*, and reservoirs) than the lower part. This explains why the wells are mainly used during the months preceding the rainy season. I zone IVb (a part of Punata Phase II), which is found mainly in the lower part of the fan, there are very few wells.

It is said that the use of tube-wells, although already limited, is being further reduced due to a gradual deterioration of the pumps, engines and filters. The technical assistance for the maintenance of the wells is entrusted to the *Dirección de Recursos Hídricos* (DRH) of the Ministry of Agriculture. This entity does not have sufficient means to perform its tasks and it has requested support from the IBTA/GTZ program. Since not much information exists on the actual use of the tube-wells and the impact of the wells on the water balance and water levels of the aquifer, a monitoring program of these aspects is to be recommended. Such a program could also investigate the extent to which well interference contributes to the restricted operation time of neighboring wells. The monitoring program should also aim at formulating recommendation on technical or financial assistance for such aspects as:

- The integration of the well systems into the new irrigation system (Punata Phase II) in the long run
- The feasibility or necessity of extension of the network of wells
- The feasibility or necessity of controlling the water-table depths and/or soil salinity by the wells
- The operation and maintenance of the wells.

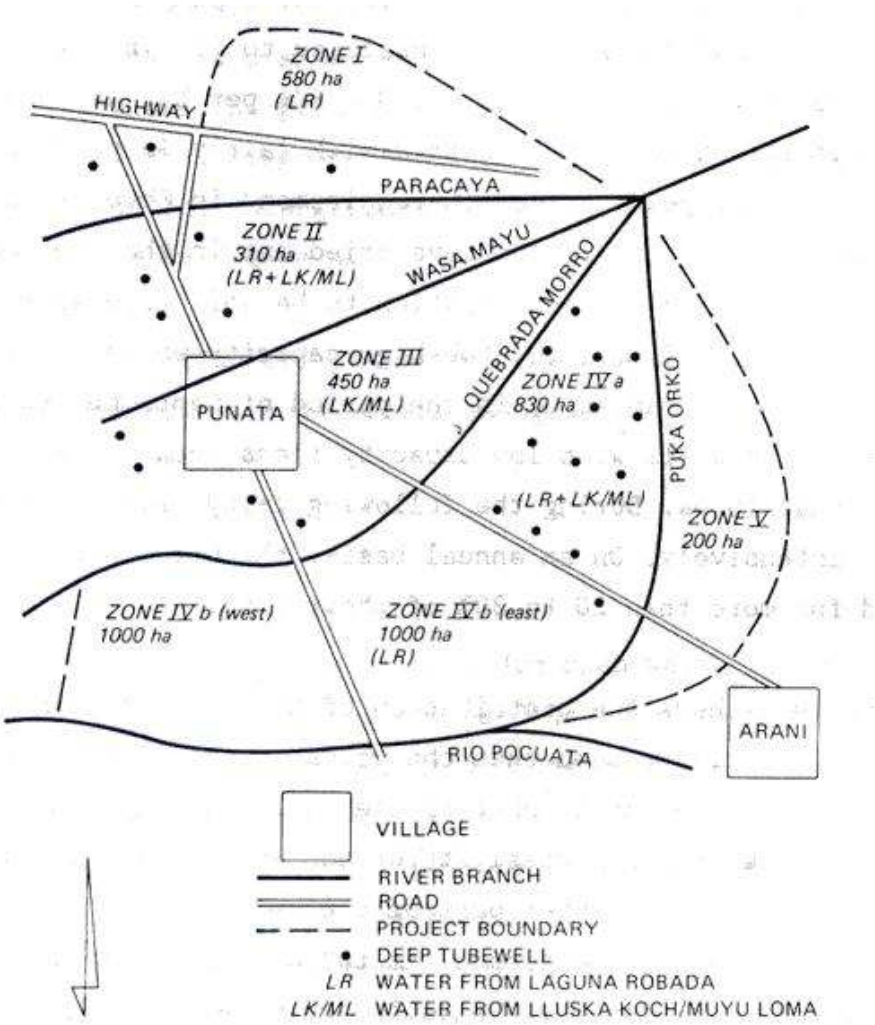

Figure 5. Sketch of the Punata region with sources of surface water and location of deep tube-wells

It is not likely that that the present well systems can soon be integrated with the new irrigation system of Punata Phase II (i.e. the make the wells publicly operated and let them discharge the water directly into the canals of the new irrigation system) from the moment is ready because:

1. - The actual users of the wells, who have invested money and labor in the well system, would oppose such a measure
2. - The majority of the wells is found in the zones irrigated from he Laguna Robada amd Lluska Cocha/Muyo Loma reservoirs (see Zone IVa), which belong to the almost completed Punata Phase I, and it is too late to negotiate the well integration with the members of the well association; the other wells are outside the project boundaries and they are not relevant to the problem;
3. - Integration of the wells would considerably complicate the already weak project operation
4. - The new irrigation system is designed to guarantee the irrigation of the entire project area (including the areas served by the wells) at about 130% intensity and there are socio-economic indications that there will be no incentive to increase this

intensity in the near future; hence the inclusion of the well water in the irrigation system is not very urgent.

Nevertheless, in the future the need may arise to expand the irrigated area beyond the boundaries of the present project as well as to increase the pumping from wells for water table and/or salinity control. In that event, it will be necessary to mix the well water with the irrigation water. So, the possibility or necessity of the integration in the long run will indeed have to be studied.

4.4 Rainfall

The rainfall distribution in Punata is characterized by a wet season from December to March, d dry season from May to October, and transition months in April and November. The average yearly total is 428 mm (1966 to 1983, San Benito). The rainfall with a probability of exceedance of 75% (R_{75}) on a year basis is 360 mm. Rainfall is not reliable: in the period from 1966 to 1983, the yearly total varied between 246 mm (1982/83) to 591 mm (1968/69). Average rainfall characteristics are shown in the following table.

Rainfall characteristics in Punata (mm/month, San Benito station, 1966 to 1983)

R_{50}	102	86	53	19	8	1	1	45	11	21	47	83	418
R_{75}	84	74	43	16	7	1	1	4	9	17	38	68	360
R_{eff} (*)	84	74	43	16	7	1	1	4	9	17	38	68	360

(*) Effective rainfall equals R_{75} minus the runoff from cultivated area.
The runoff is calculated as Rainfall intensity (mm/hour) minus infiltration capacity of cultivated soil
According to the soil survey report (1987) the infiltration capacity exceeds for all soils the rainfall intensity in all months.
Hence $R_{eff} = R_{75}$

The average rainfall in Tiraque is 509 mm/year (1960 to 1986) with a lowest value of 325 mm (in 1983) and highest value of 709 mm (in 1974). The R_{75} value on a yearly basis in Tiraque is 495 mm. According to the working paper of the O & M program for Tiraque (agreed upon by IBTA/GTZ and SNDC/SCG), the effective rainfall in Tiraque is 440 mm.

4.5 Summary of water resources

Punata system	actual hm^3	with Totora Kocha hm^3
Reservoirs (*)	4.1	25.9
Useful river flow (**)	24.7	24.7
Groundwater	3.8	7.8
Eff. Rainfall (***)	14.0	14.0
Total	46.0	71.4
Tiraque system		
Reservoirs (*)	5.3	4.4
Useful river flow (**)	9.6	9.6
Eff. Rainfall (***)	4.4	4.4
Total	19.3	18.4

(*) Effective storage (reservoir capacity minus dead storage)
(**) Only 35% of the river flow is useful for irrigation due to the irregular flow pattern
(***) Effective rainfall in Punata (360 mm) over 4000 ha
Effective rainfall in Tiraque (440 mm) over 1000 ha

5. Present and future water requirements

(To be completed)

5.1 Punata

5.2 Tiraque

6. Water requirements and availability

(To be completed)

6.1 Actual and projected cropping pattern in Punata

6.2 Water availability in Tiraque

7. Soils, salinity and water tables

7.1 Soil survey reports and additional observations

In 1987, the Bolivian company AgroConsult made a soil survey of the Punata region on behalf of SCG. The survey was carried out in 3 sectors (A, B, and C) of 400 to 500 ha each, which were selected with a view to possible problems of soil salinity and/or water-logging due to shallow groundwater tables.

The report shows that the electric conductivity of an extract of a saturated soil (Ece) is seldom higher than dS/m (mmho/cm), which is a very safe value for agriculture.

The saline spots that can be observed in some parts of the region surrounding the village of Punata are apparently superficial and noticeable only during the dry season. The subsequent rainfall and irrigation seem to wash the salts down quickly to deeper layers. According to the information obtained from farmers, the productivity of the seemingly salty soils is high. Some intersperse parcels, however, are not used for agriculture, but for keeping cattle or manufacturing bricks. The question whether these parcels are not cultivated because they are salty or whether they are salty because they are not irrigated remains open, but from the fact that the uncultivated parcels are found interspersed between productively cultivated parcels one tends to reach the latter conclusion, even though it may be that the uncultivated parcels serve as salt accumulation places safeguarding the cultivated ones.

The soil report indicates a strong sodicity of the soils, because the majority of the observations show an exchangeable sodium percentage (ESP) greater than 15, whereas 13 of the 98 observations show ESP values above 40, which is quite high, and may be indicative of collapsing soil structure. Fortunately, most of the soils do not have high clay fractions, and the clay minerals appear not to be of the swelling/shrinking type and are not having a high cat-ion exchange capacity (CEC). Therefore, the sodicity problem does not manifest itself strongly and one does not observe sealed surface layers. Further, the infiltration tests that the soils have a considerable infiltration capacity. Also, there are few soils with pH values at saturation point which are higher than 9. Consequently, the sodicity problem is less than suggested by the ESP values and the danger of alkalinization is limited.

The soil study shows the presence of significant areas with shallow groundwater-tables, with the major part in the class from 1.0 to 1.5 m depth. The measurements were made in the months of April/May 1987, when the water levels are at their peak. In September 1987, the water-tables were much deeper. This indicates that there is no upward seepage of groundwater and possible a net downward groundwater flow instead. Any salts that may have accumulated at the soil surface during the dry period due to capillary rise and evaporation of the soil moisture, will be washed down again with the first irrigation (if given in sufficient quantity) or rainfall. Hence, the present depth of the water-table is not inductive to high soil salinities, as is confirmed by the soil salinity data.

In a fairly large area to the south and southwest of Punata village, outside the limits of the project area, it was noted that the alfalfa crop continues to grow during the drought period. For this area it is assumed that there exists an upward groundwater flow, which continues to supply the crop with moisture. Such areas are most likely to develop soil salinity problems, because not much leaching can take place during the wet season as there is no natural subsurface drainage. Hence the salt content continues to build up during the course of the years while the salts brought in by the groundwater stay behind in the soil after the water has evaporated. However, the seepage water contains so little salt (less than 200 ppm) that the salt accumulation process is very slow. Perhaps so slow that the salt removal by the crop itself, together with the surface drainage during the wet season, is sufficient for the maintenance of an acceptable salt balance. This seems to be the case for the situation mentioned, because there are no signs of significant salinization, whereas the groundwater supply is used advantageously.

7.2 Assessment of the future salinity and drainage problems

The observations made in the former section confirm that, under the present hydrologic conditions, the risk of soil salinization is very small. In the future, however, much more irrigation water will become available and with it the amount of salt imported become higher, however good the quality of the irrigation water. Also, the recharge to the groundwater will increase. As a consequence, the groundwater will rise to higher levels than before, and the areas with upward seepage of groundwater will increase. On the other hand, the net underground outflow through the aquifer will also increase. The increase of the seepage zones suggests that there the risk of salination becomes higher, but on the other hand, the increase of outflow through the aquifer will counteract this. Also, the increased groundwater outflow into the collector drainage system will affect the salt balance favorably.

Although the future water balance of the aquifer cannot be estimated with sufficient accuracy to determine accurately the future development of salinity problems, it can be stated that salinity problems, if they arise, will not occur uniformly over the whole project area, but it will be scattered in a few seepage zones.

The general rise of the water-table that is to be expected after the introduction of the additional irrigation water from the Totora Cocha, will in some spots lead to drainage problems, in the sense that after intensive rainfall or irrigation a situation of water-logging occurs. In isolated places, the water-logging may even become manifest without an intensive recharge by rainfall or irrigation. In still other places, however, the rise of the water-table may have a beneficial effect on the cropping possibilities, like the case of the alfalfa production to the southwest of the village of Punata.

In the long run the rise of the water-tables will lead to a reduced application of irrigation water in the zones with high water-tables, to avoid the problem of water-logging. No farmer will intensively irrigate land that is already wet. Hence, the irrigation efficiencies will increase, the irrigation water can be used over a larger area and the recharge intensity of the groundwater is decreased. It is therefore likely that any future water-logging problems will (like the soil salinity) not occur uniformly

over the whole project area, but scattered in relatively low-lying zones. Hence there is no immediate need of a subsurface drainage program.

Given the difficulty to accurately predict the future salinity and/or water-table build-up, it is recommended to perform a monitoring program of those two parameters in some selected parcels, and to provide technical and financial assistance in case remedial measure need to be taken.

8. Irrigation and drainage network in Punata

(To be completed)

8.1 Existing irrigation system

8.2 New irrigation network

8.3 Observations on the new irrigation network design

8.4 Drainage systems

8.4.1 River branches

8.4.2 Collector drainage system

9. Operation and maintenance

(To be completed)

9.1 Background

9.2 The present O & M program

9.3 Proposal for a reorganized O & M unit

10 Financial and economic evaluation

(To be completed)